SR-WASD
SR-WASD□
SR-WPASD
SR-WPASD□
SRA-WASD
SRA-WASD□
SRA-WPASD
SRA-WPASD□

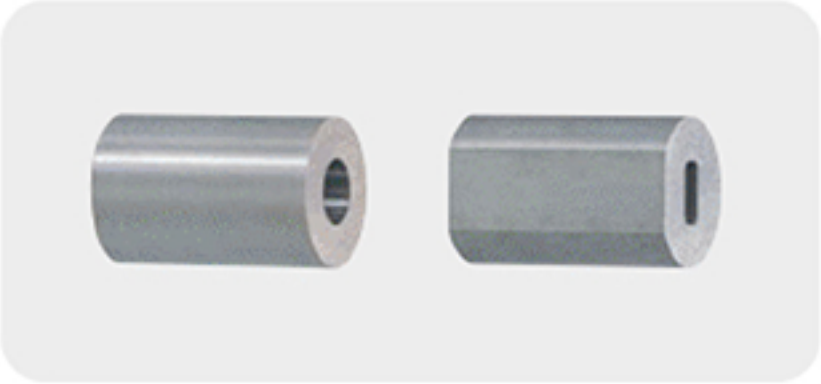

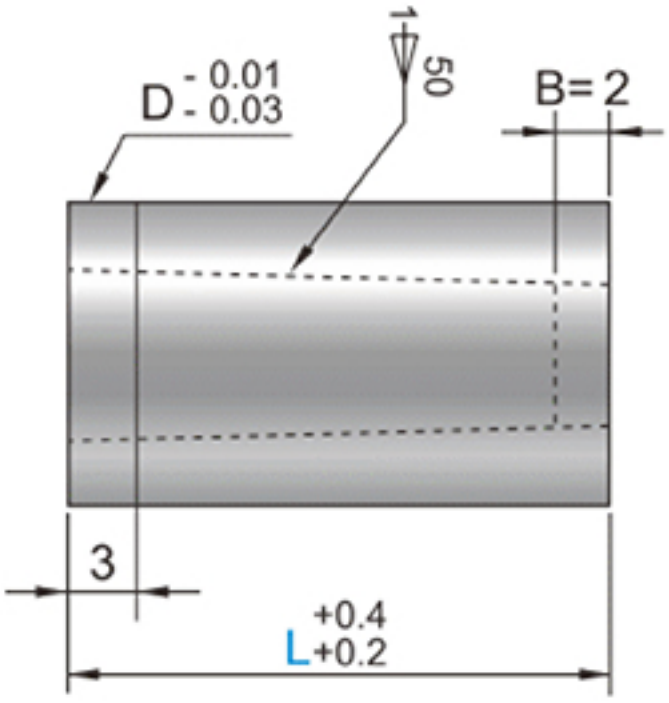

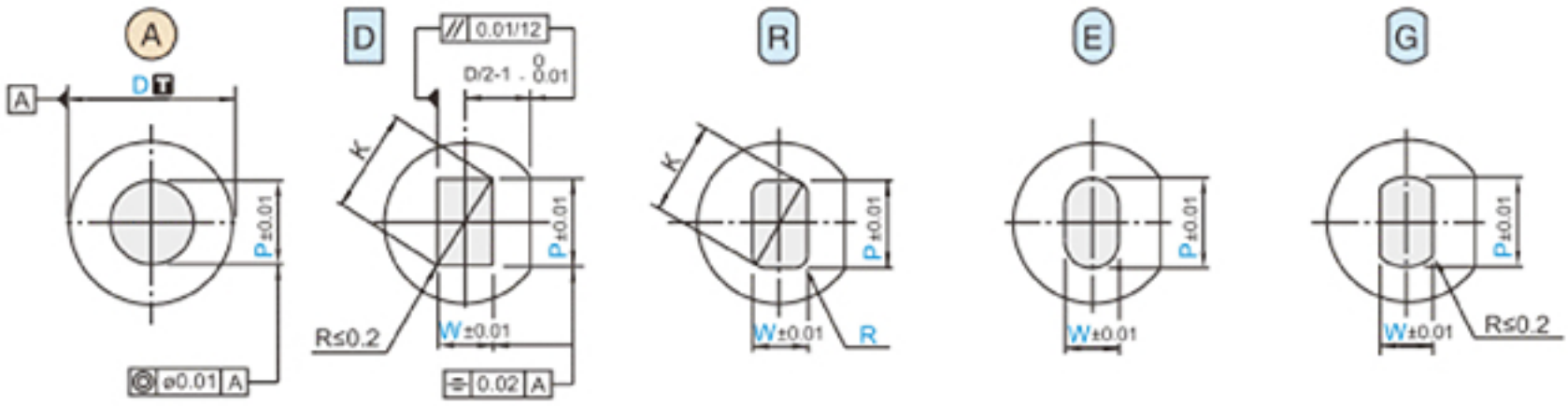

P≥W	$K=\sqrt{P^2+W^2}$	P≥W	0.20 ≤ R < W/2	P>W	P>W
P - 0.4 ≥1.5		$K=\sqrt{(P-2R)^2+(W-2R)^2}+2R$			$\sqrt{P^2-W^2}$ ≥1.5
		P - 2R≥1.5			

T	M	H	D	Type (Catalog No.)
D n5	SKD11	60~63HRC	D8~25	D E R G SR-WASD□
			D6~25	A SR-WASD
	SKH51	61~64HRC	D4~ 5	
		64~67HRC	D4~25	A SR-WPASD
			D6~25	D E R G SR-WPASD□
$D^{+0.005}_{0}$	SKD11	60~63HRC	D8~16	D E R G SRA-WASD□
			D6~16	A SRA-WASD
	SKH51	61~64HRC	D4~ 5	
		64~67HRC	D4~16	A SRA-WPASD
			D8~16	D E R G SRA-WPASD□

ORDER	Catalog No.	- L	- P	- W	- R (Ⓡ)	- MT	- C
	SR-WASDE 8	- 20	- P3.80	- W2.00		-MT1.50	- C0.105

D			Catalog No.				L	Ⓐ	Ⓓ Ⓔ Ⓡ Ⓖ		Ⓡ	MT	C
D	n5	$^{+0.005}_{0}$	(D n5)		($D^{+0.005}_{0}$)	D		P	P·Kmax.	P·Wmin.	R		
(4)	+0.013		Ⓐ SR-WASD	(SKH51)	SRA-WASD	(4)	8·13·16·20·22·25·30	1.00 ~ 1.50	—	—	—	MT	C
(5)	+0.008		SR-WPASD		SRA-WPASD	(5)		1.00 ~ 2.50	—	—		≥	≥
(6)				(SKD11)		(6)		1.00 ~ 3.00	—	—		0.15	0.010
8	+0.016	$^{+0.005}_{0}$	Ⓐ SR-WASD		SRA-WASD	8		1.00 ~ 4.00	4.00	1.00	0.15		
10	+0.010		Ⓓ Ⓡ Ⓔ Ⓖ SR-WASD□		SRA-WASD□	10		2.00 ~ 6.00	6.00	1.20	~		
13	+0.020					13	16·20·22·25·30·35	3.00 ~ 8.00	8.00	1.50	W/2	0.15mm	0.010mm
16	+0.012					16		5.00 ~ 10.00	10.00	2.00			
(20)	+0.024		Ⓐ SR-WPASD		SRA-WPASD	(20)		7.00 ~ 12.00	12.00	3.00			
(25)	+0.015	—	Ⓓ Ⓡ Ⓔ Ⓖ SR-WPASD□		SRA-WPASD□	(25)		10.00 ~ 16.00	16.00	3.00	Ⓡ		

① D=(4)(5)(6)
① D=(20)(25)

C

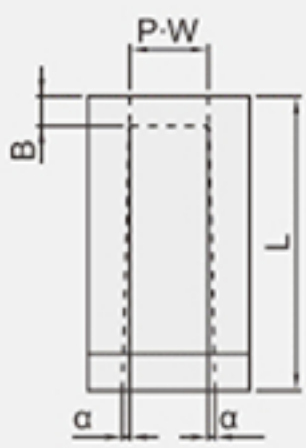

L	1/50	1/100	1/150
16	0.28	0.14	0.09
20	0.36	0.18	0.12
22	0.40	0.20	0.13
25	0.46	0.23	0.15
30	0.56	0.28	0.19
35	0.66	0.33	0.22
40	0.76	0.38	0.25